DELTA

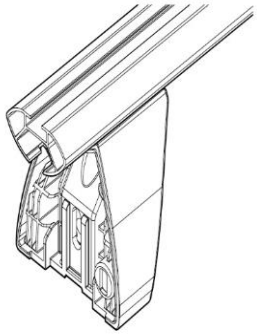

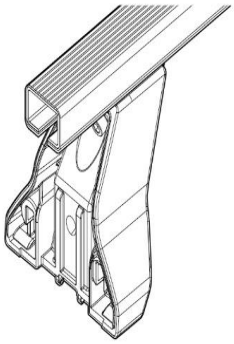

OMEGA

PAG. 5

FIXING KIT DELTA

1

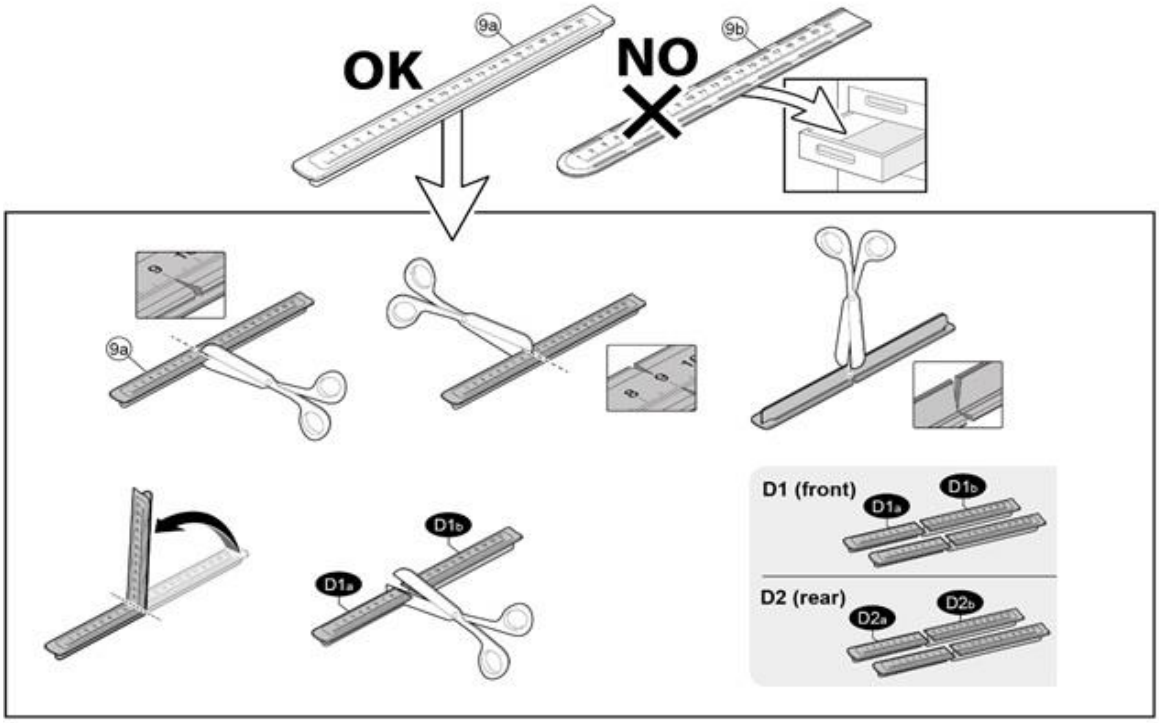

MANUFACTURER	MODEL CAR	DOORS	MODEL YEAR	D1	D2
AUDI	*A3 (8Y) Sportback*	*5*	*20>*	*5,6*	*2,9*
AUDI	*A8 (D5/4N)*	*4*	*17>*	*8,0*	*8,2*
CITROEN	*C4 (Mk3)*	*5*	*20>*	*3,5*	*2,4*
CITROEN	*C4X / e C4X (E43)*	*5*	*22>*	*2,6*	*2,2*
CITROEN	*C5 X (E43)*	*5*	*21>*	*4,5*	*3,1*
DS	*4 (Mk2)*	*5*	*21>*	*5,1*	*2,7*
FORD	*Focus IV*	*5*	*18>*	*7,7*	*7,7*
NISSAN	*Qashqai / Dualis (J11)*	*5*	*14>17*	*11,1*	*9,0*
NISSAN	*Qashqai / Dualis (J11)*	*5*	*17>21*	*11,1*	*9,0*
OPEL / VAUXHALL	*Astra (L) (no tetto vetro / no glass sunroof)*	*5*	*21>*	*4,6*	*3,2*
PEUGEOT	*308 (P5)/308 (MK3)*	*5*	*21>*	*4,6*	*3,7*
PEUGEOT	*308 Station Wagon (P52) / 308 Station Wagon (Mk3)*	*5*	*21>*	*4,2*	*3,5*
PEUGEOT	*408 / 408X (P54)*	*5*	*22>*	*4,1*	*4,1*
RENAULT	*Arkana*	*5*	*20>*	*7,3*	*5,6*
RENAULT	*Clio V*	*5*	*19>*	*13,2*	*13,2*
RENAULT	*Grand Scenic IV*	*5*	*17>*	*12,4*	*9,3*
RENAULT	*Megane III*	*5*	*08>16*	*13,2*	*13,7*

RENAULT	Megane III Sportour (notetto vetro / no glass sunroof)	5	09>16	13,1	13,1
RENAULT	Megane IV Grand Coupé	4	17>	7,7	6,4
RENAULT	Scenic IV	5	17>	12,2	8,4
RENAULT	Scenic X Mod	5	09>13	9,8	8,9
SKODA	Enyaq Coupè	5	22>	11,0	10,5
SKODA	Scala	5	19>	5,2	4,3
VOLKSWAGEN	Golf VII	5	12>19	6,2	4,6
VOLKSWAGEN	Golf VII (5G) GTI / GTD / GTE	5	12>19	6,2	4,6
VOLKSWAGEN	Golf VIII	5	19>	5,1	2,8
VOLVO	S60	4	18>	7,0	9,7
VOLVO	S90	4	16>	6,3	7,0

2

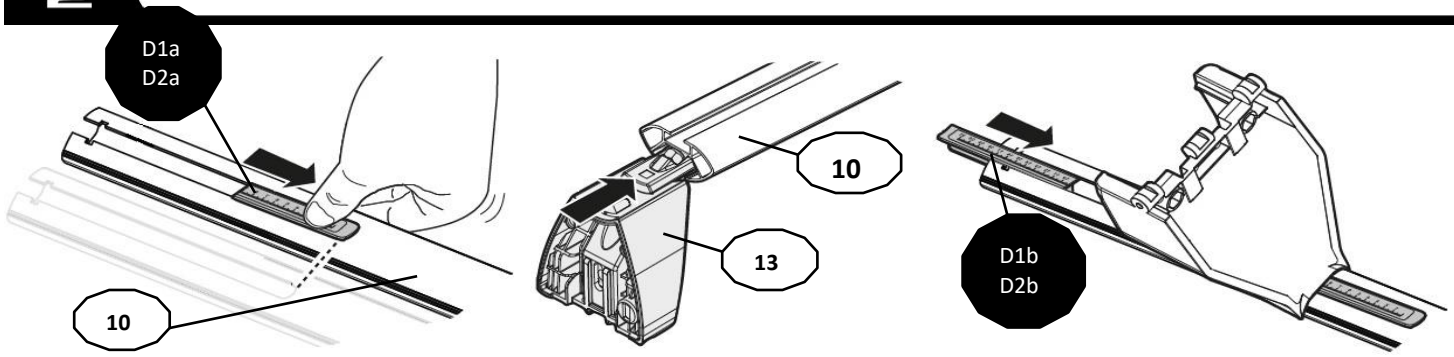

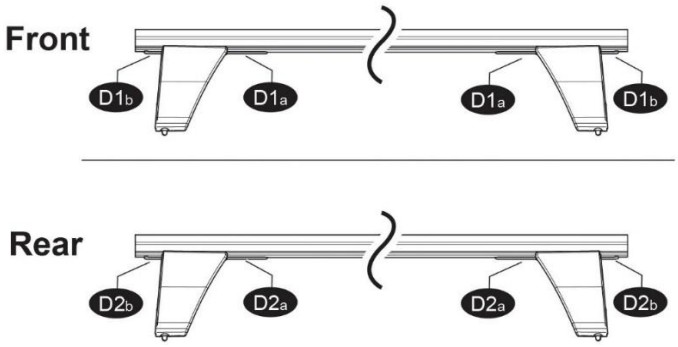

3

x4

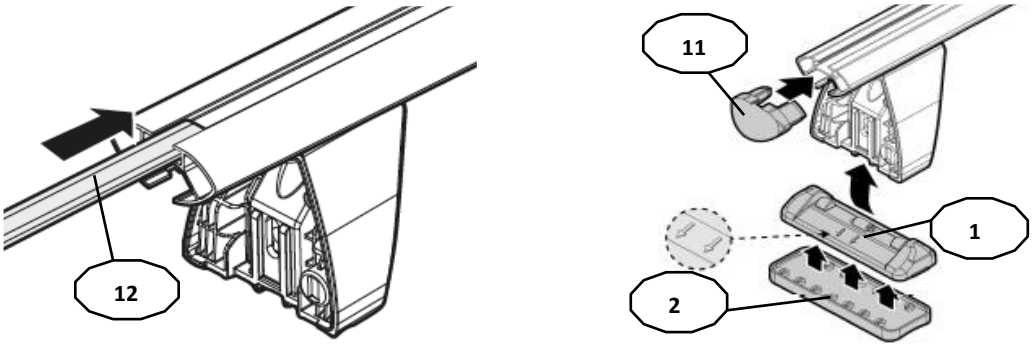

4

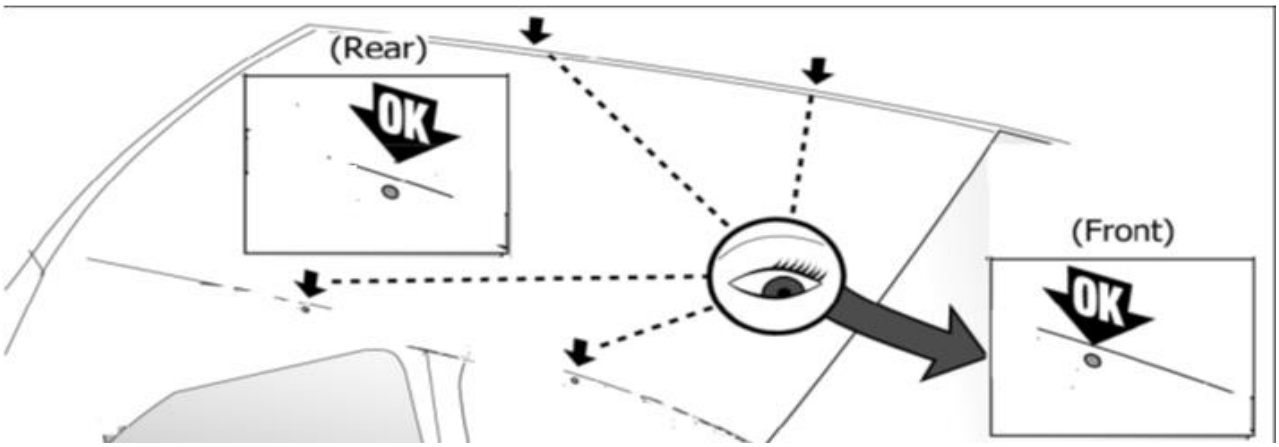

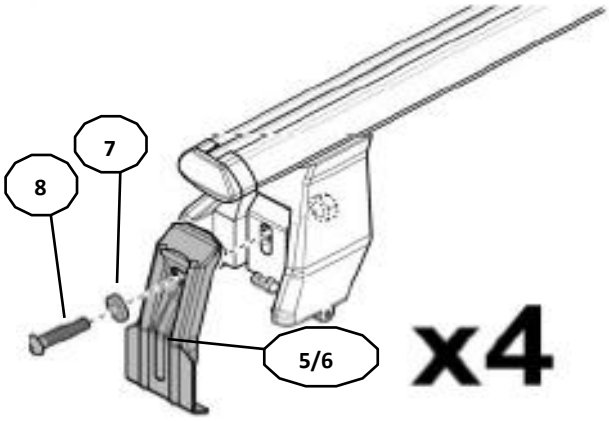

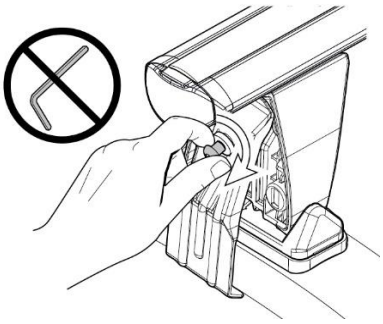

Front	Rear
5	6

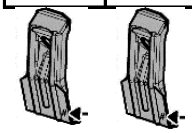

37	37
2X	2X

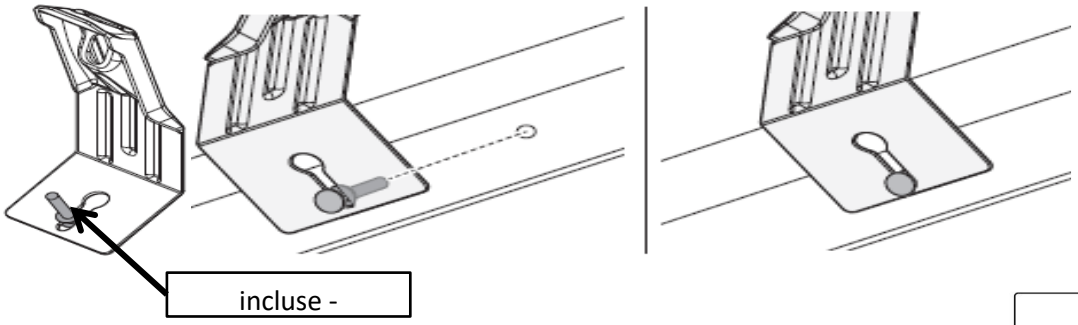

MANUFACTURER	MODEL CAR	DOORS	MODEL YEAR
AUDI	*A8 (D5/4N)*	*4*	*17>*
AUDI	*A3 (8Y) Sportback*	*4*	*20>*
CITROEN	*C5 X (E43)*	*5*	*21>*
NISSAN	*Qashqai / Dualis (J11)*	*5*	*14>21*
RENAULT	*Megane III Sportour (notetto vetro / no glass sunroof)*	*5*	*09>16*

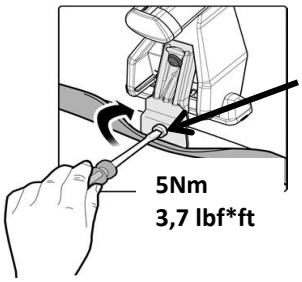

MANUFACTURER	MODEL CAR	DOORS	MODEL YEAR
FORD	*Focus IV*	*5*	*18>*
RENAULT	*Arkana*	*5*	*20>*

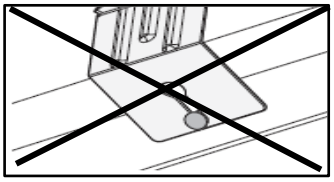

MANUFACTURER	MODEL CAR	DOORS	MODEL YEAR	A1	A2	A1	A2
				cm	cm	in	in
VOLKSWAGEN	*Golf VIII*	*5*	*19>*	*X*	*35*	*X*	*13,8*

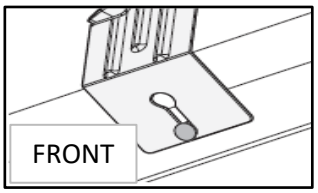

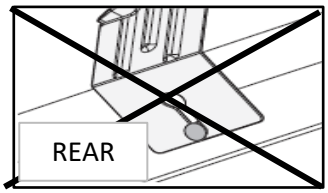

MANUFACTURER	MODEL CAR	DOORS	MODEL YEAR	A1	A2	A1	A2
				cm	cm	in	in
VOLKSWAGEN	*Golf VII*	*5*	*12>19*	*X*	*34*	*X*	*13,4*
VOLKSWAGEN	*Golf VII (5G) GTI / GTD / GTE*	*5*	*12>19*	*X*	*34*	*X*	*13,4*

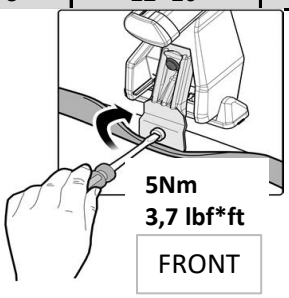

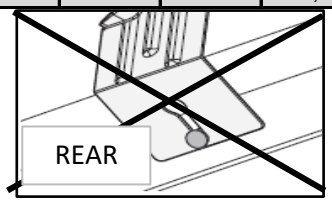

5

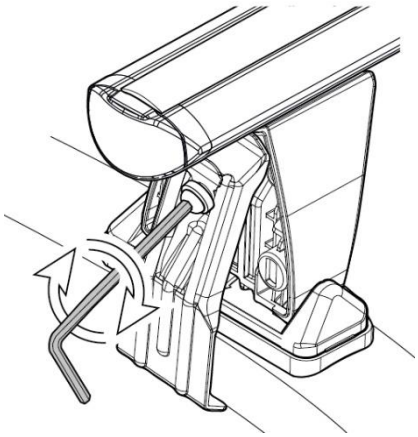

6

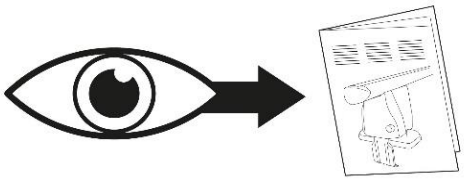

MANUAL DELTA

FIXING KIT OMEGA

2

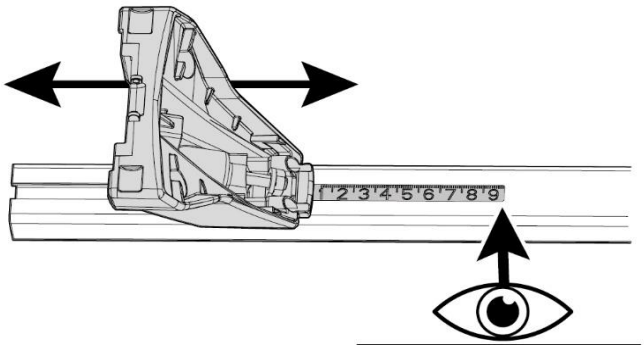

D1 (Front)	D2 (Rear)
xxx	xxx

MANUFACTURER	MODEL CAR	DOORS	MODEL YEAR	D1	D2
AUDI	A3 (8Y) Sportback	5	20>	5,6	2,9
AUDI	A8 (D5/4N)	4	17>	8,0	8,2
CITROEN	C4 (Mk3)	5	20>	3,5	2,4
CITROEN	C4X / e C4X (E43)	5	22>	2,6	2,2
CITROEN	C5 X (E43)	5	21>	4,5	3,1
DS	4 (Mk2)	5	21>	5,1	2,7
FORD	Focus IV	5	18>	7,7	7,7
NISSAN	Qashqai / Dualis (J11)	5	14>17	11,1	9,0
NISSAN	Qashqai / Dualis (J11)	5	17>21	11,1	9,0
OPEL / VAUXHALL	Astra (L) (no tetto vetro / no glass sunroof)	5	21>	4,6	3,2
PEUGEOT	308 (P5)/308 (MK3)	5	21>	4,6	3,7
PEUGEOT	308 Station Wagon (P52) / 308 Station Wagon (Mk3)	5	21>	4,2	3,5
PEUGEOT	408 / 408X (P54)	5	22>	4,1	4,1
RENAULT	Arkana	5	20>	7,3	5,6
RENAULT	Clio V	5	19>	13,2	13,2
RENAULT	Grand Scenic IV	5	17>	12,4	9,3
RENAULT	Megane III	5	08>16	13,2	13,7
RENAULT	Megane III Sportour (notetto vetro / no glass sunroof)	5	09>16	13,1	13,1
RENAULT	Megane IV Grand Coupé	4	17>	7,7	6,4
RENAULT	Scenic IV	5	17>	12,2	8,4
RENAULT	Scenic X Mod	5	09>13	9,8	8,9
SKODA	Enyaq Coupè	5	22>	11,0	10,5
SKODA	Scala	5	19>	5,2	4,3
VOLKSWAGEN	Golf VII	5	12>19	6,2	4,6
VOLKSWAGEN	Golf VII (5G) GTI / GTD / GTE	5	12>19	6,2	4,6
VOLKSWAGEN	Golf VIII	5	19>	5,1	2,8
VOLVO	S60	4	18>	7,0	9,7
VOLVO	S90	4	16>	6,3	7,0

3

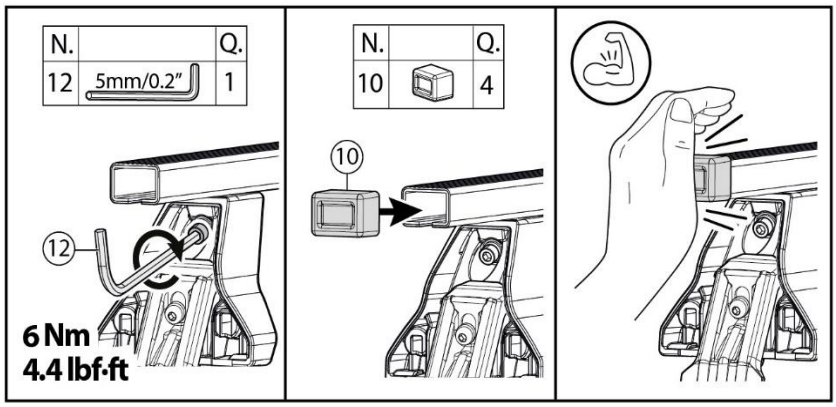

4

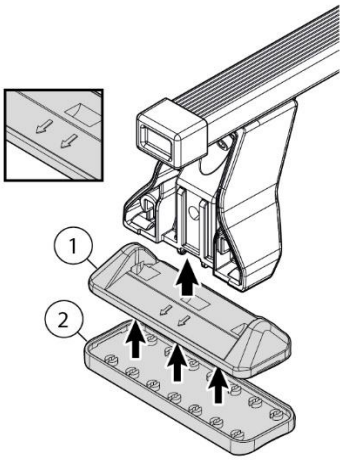

5

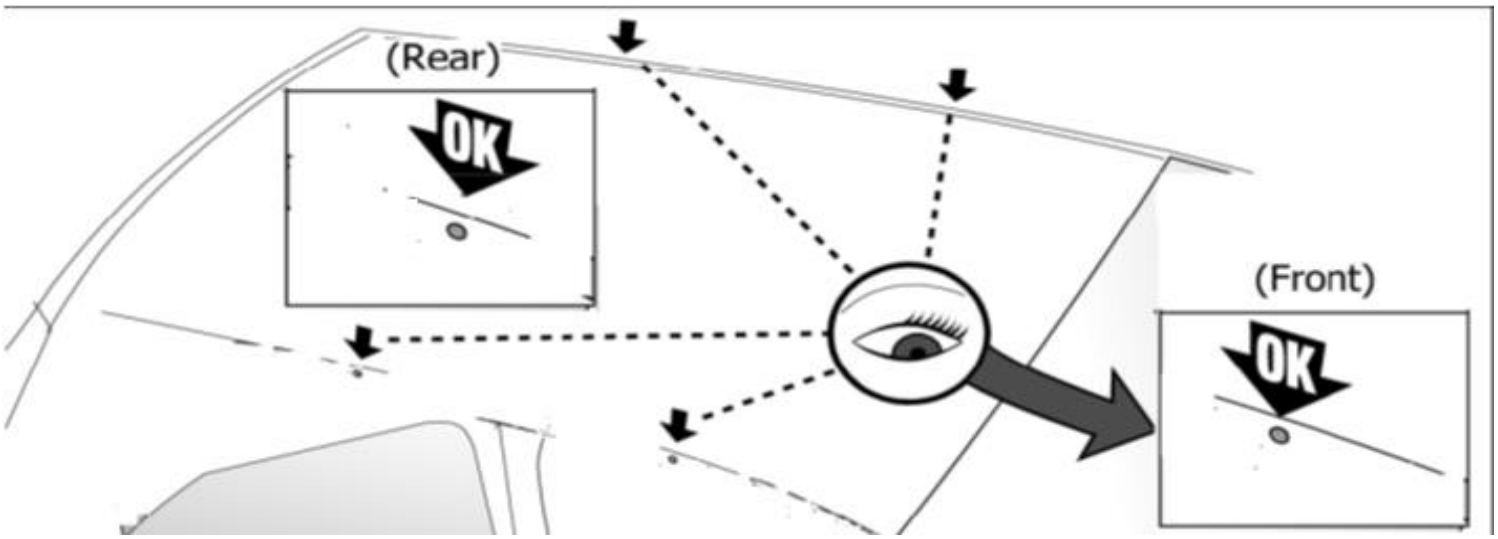

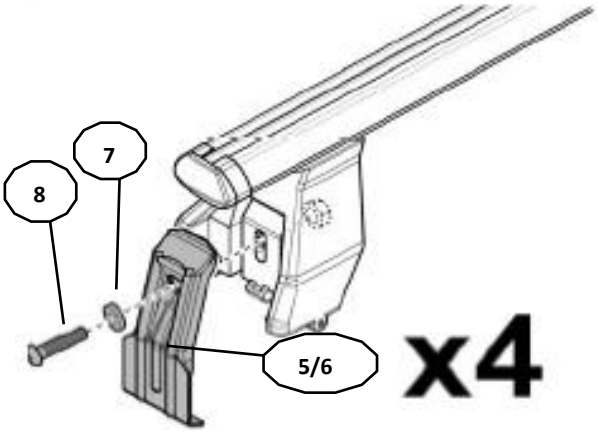

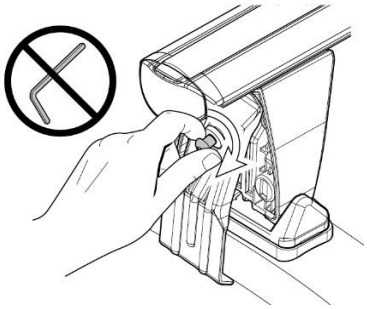

Front	Rear
5	6
37	37
2X	2X

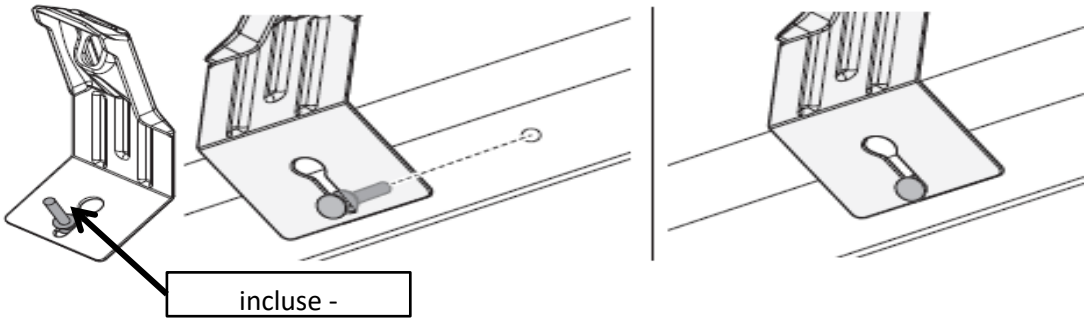

MANUFACTURER	MODEL CAR	DOORS	MODEL YEAR
AUDI	*A8 (D5/4N)*	*4*	*17>*
AUDI	*A3 (8Y) Sportback*	*4*	*20>*
CITROEN	*C5 X (E43)*	*5*	*21>*
NISSAN	*Qashqai / Dualis (J11)*	*5*	*14>21*
RENAULT	*Megane III Sportour (notetto vetro / no glass sunroof)*	*5*	*09>16*

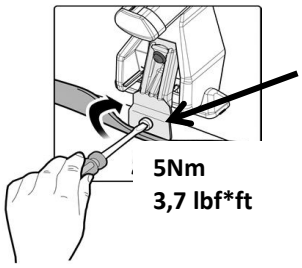

MANUFACTURER	MODEL CAR	DOORS	MODEL YEAR
FORD	*Focus IV*	*5*	*18>*
RENAULT	*Arkana*	*5*	*20>*

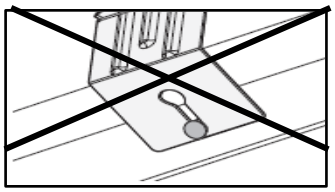

MANUFACTURER	MODEL CAR	DOORS	MODEL YEAR	A1	A2	A1	A2
				cm	cm	in	in
VOLKSWAGEN	*Golf VIII*	*5*	*19>*	*X*	*35*	*X*	*13,8*

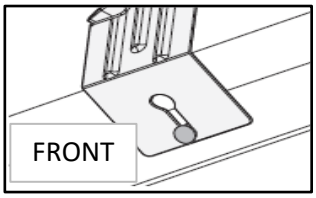

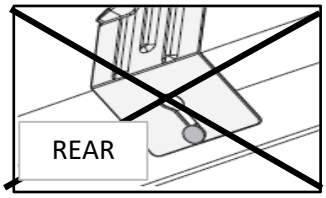

MANUFACTURER	MODEL CAR	DOORS	MODEL YEAR	A1	A2	A1	A2
				cm	cm	in	in
VOLKSWAGEN	*Golf VII*	*5*	*12>19*	*X*	*34*	*X*	*13,4*
VOLKSWAGEN	*Golf VII (5G) GTI / GTD / GTE*	*5*	*12>19*	*X*	*34*	*X*	*13,4*

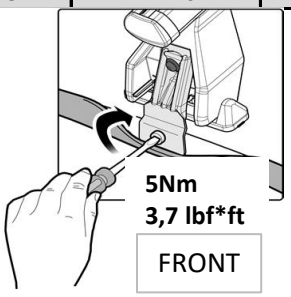

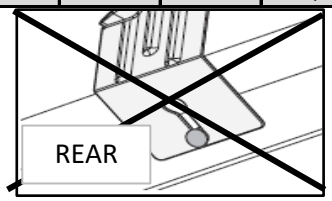

6

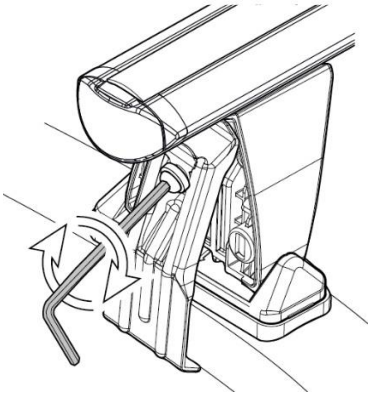

7

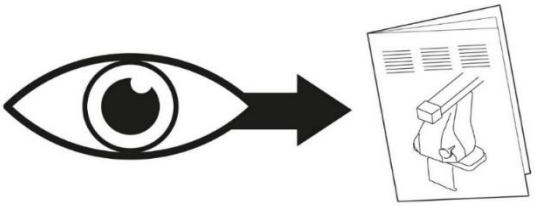

MANUAL OMEGA

NOTE:

……..

……..

……..